IMPORTANT NOTICE - READ CAREFULLY

Regulating Hose Kit (RHK) Procedure

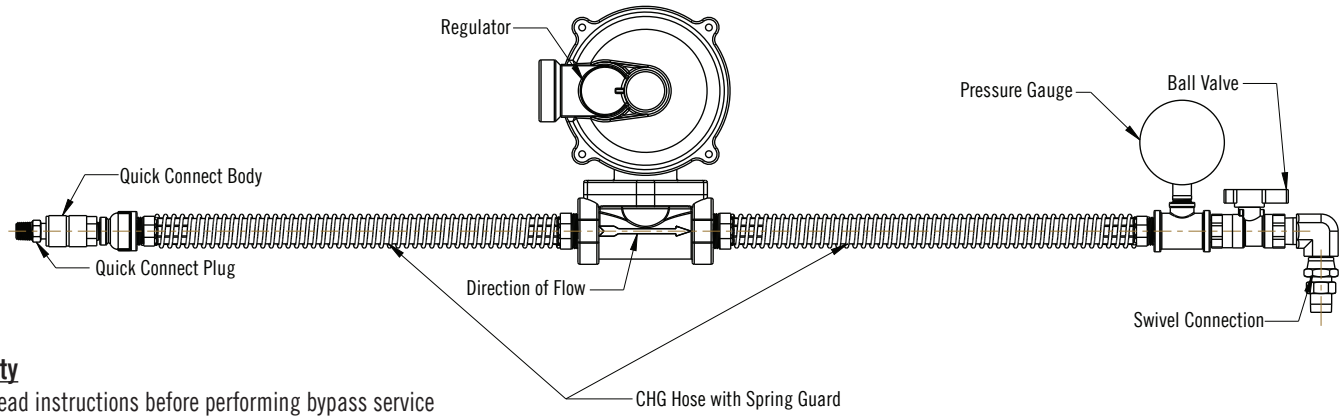

Safety

- Read instructions before performing bypass service
- Ensure all users have proper training with RHK
- DO NOT EXCEED PRESSURE LIMIT OF EQUIPMENT
- DO NOT leave RHK unattended while in use
- DO NOT perform operation in confined space
- Check for stray voltage at the meter set
- Beware of sources of ignition and safety hazards when purging gas or checking pressure
- Monitor gauges while in use to ensure pressure is maintained through bypass operation
- Under pressure inspect water column gauge for accuracy
- Inspect fittings, regulators, gauges, and hose for any signs of damage - replace if identified
- Follow all utility procedures and safety protocols during operation
- Use smooth jaw wrenches only
- Follow all local codes for operating RHK
- Safe for use with Natural Gas

Performing Bypass with RHK

- Ensure proper kit and fittings are available for performing the bypass operation
- Verify source gas pressure is adequate for performing the task at hand per utility standards
- Verify bypass operating features are in correct orientation for safe operation
- Thread quick connect plug into riser valve bypass tap with proper sealant
- Thread NPT hex nipple into outlet bypass port **(Fig. A)**
- Attach quick connect and loosely thread on swivel elbow connection
- Activate riser bypass valve to allow gas into hose
- Open valve on hose to purge through loose connection before tightening swivel hand-tight **(Fig. B)**
- Engage bypass on the outlet and turn off normal flow to meter set
- The meter set is now in bypass mode and service can be performed
- When service is complete and meter is purged, turn the meter set back to normal flow mode per utility standards
- With normal flow engaged, shut off source pressure to bypass hose kit
- Loosen swivel connection and release hose pressure through low pressure side
- Remove the NPT hex nipples and store hose kit safely

*Follow the standard bypass procedure for A.Y. McDonald Inline Gas Bypass Ball Valves according to instruction sheet 3210-635.

*Follow the standard bypass procedure for A.Y. McDonald Angle Gas Bypass Ball Valves according to instruction sheet 3210-389.

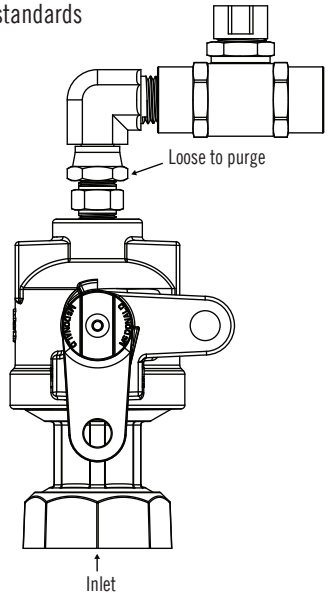

(Fig. A)

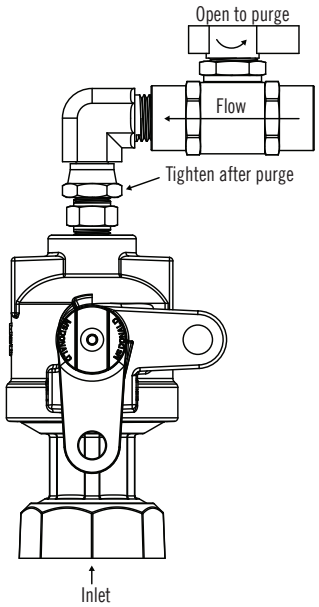

(Fig. B)

WARNING: This product can expose you to chemicals including lead, which is known to the State of **CALIFORNIA** to cause cancer and birth defects or other reproductive harm. For more information go to: www.P65Warnings.ca.gov.